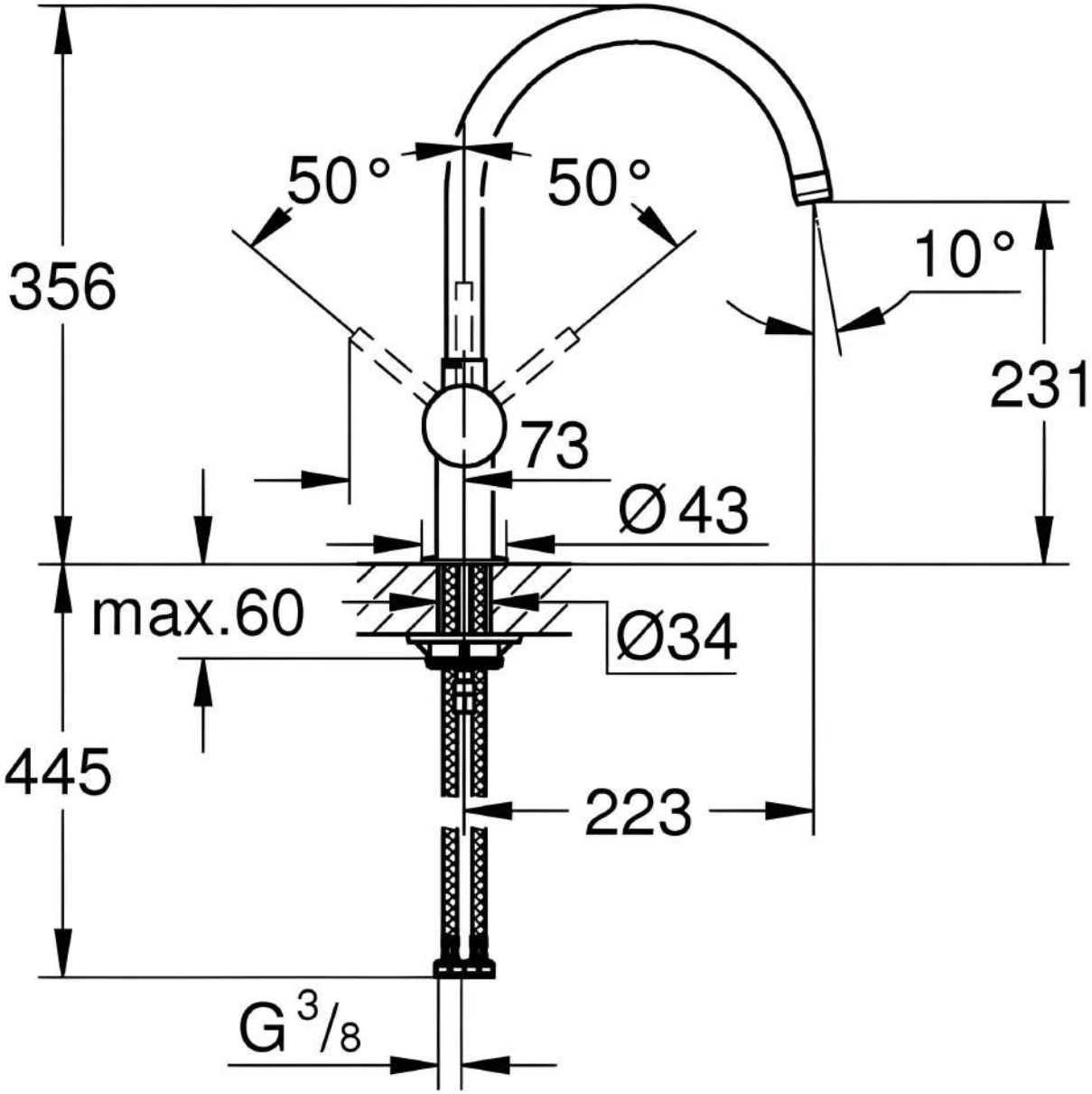
50°
50°
10°
356
231
73
Ø43
max.60
Ø34
445
223
G 3/8

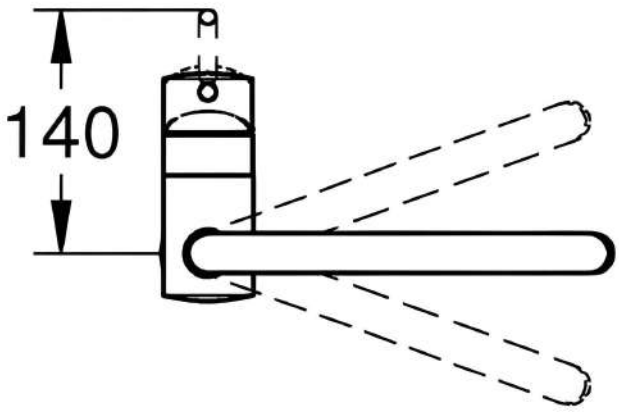
140