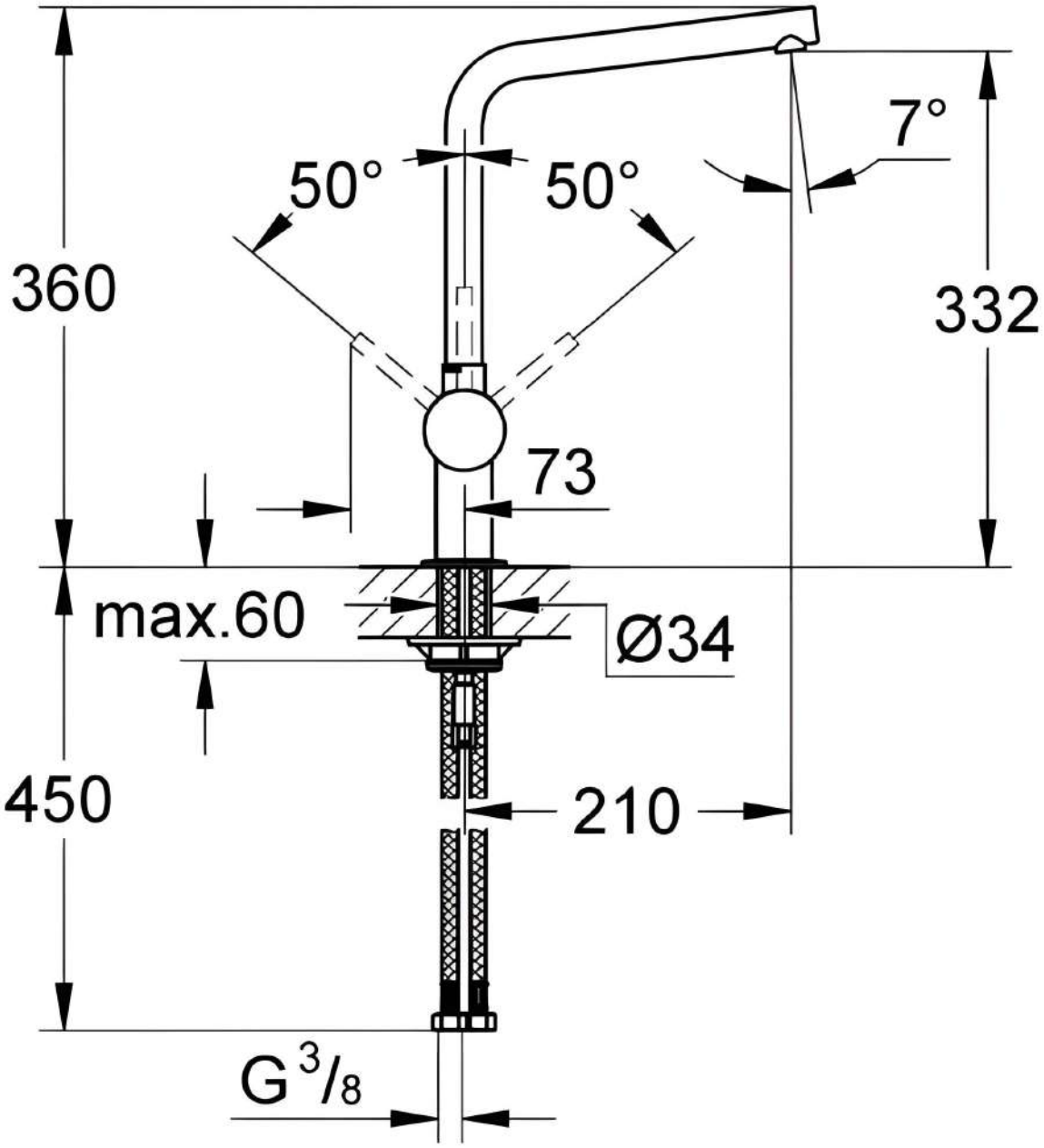
360
50°
50°
7°
332
73
max.60
Ø34
450
210
G 3/8

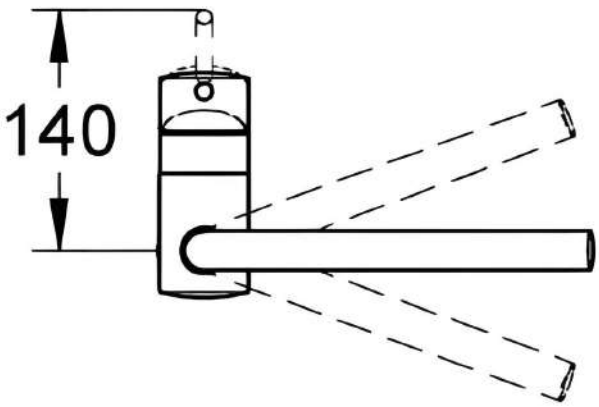
140