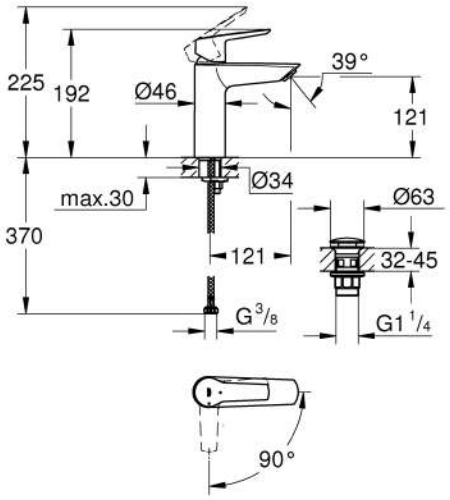
225
192
Ø46
39°
121
max.30
Ø34
370
121
Ø63
32-45
G3/8
G1 1/4
90°

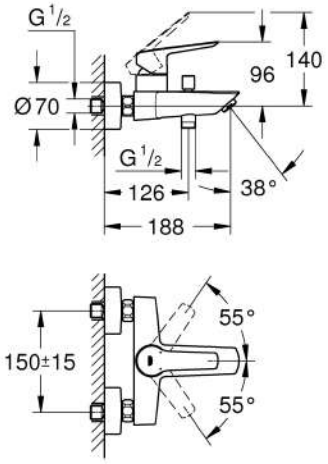
G1/2
140
96
Ø70
G1/2
126
38°
188
55°
150±15
55°

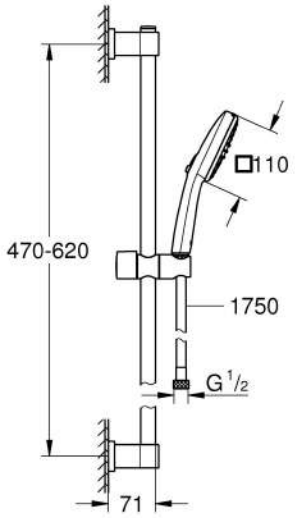
110
470-620
1750
G1/2
71