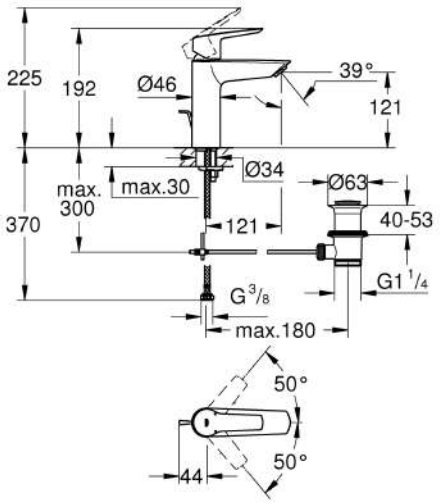
225
192
Ø46
39°
121
Ø34
max.
300
max.30
Ø63
40-53
370
121
G1 1/4
G 3/8
max.180
50°
50°
44

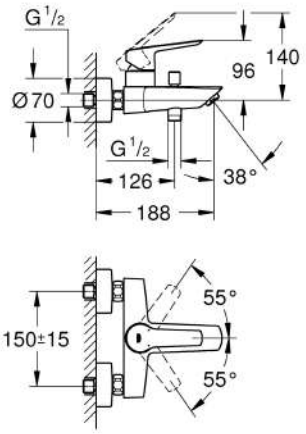
G 1/2
140
96
Ø70
G 1/2
126
38°
188
55°
150±15
55°

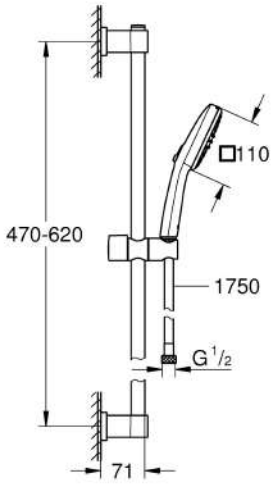
110
470-620
1750
G 1/2
71